DIMNS MARKED DENOTES (S) SAFETY/REGULATION (F) CRITICAL FIT/FUNCTION (M) MAJOR FIT/FUNCTION (MI) MINOR FIT/FUNCTION

DIM 'A'	DIM 'B'	FINISH GRIND SIZE	BEFORE POST CHROME GRINDING	PLATING THK. AFTER POST CHROME GRINDING, DIM 'C' (F)	∅'C' (F)
△A 144.5	81	∅13.938~13.949	18±3μ	15±3μ	∅13.960~13.986

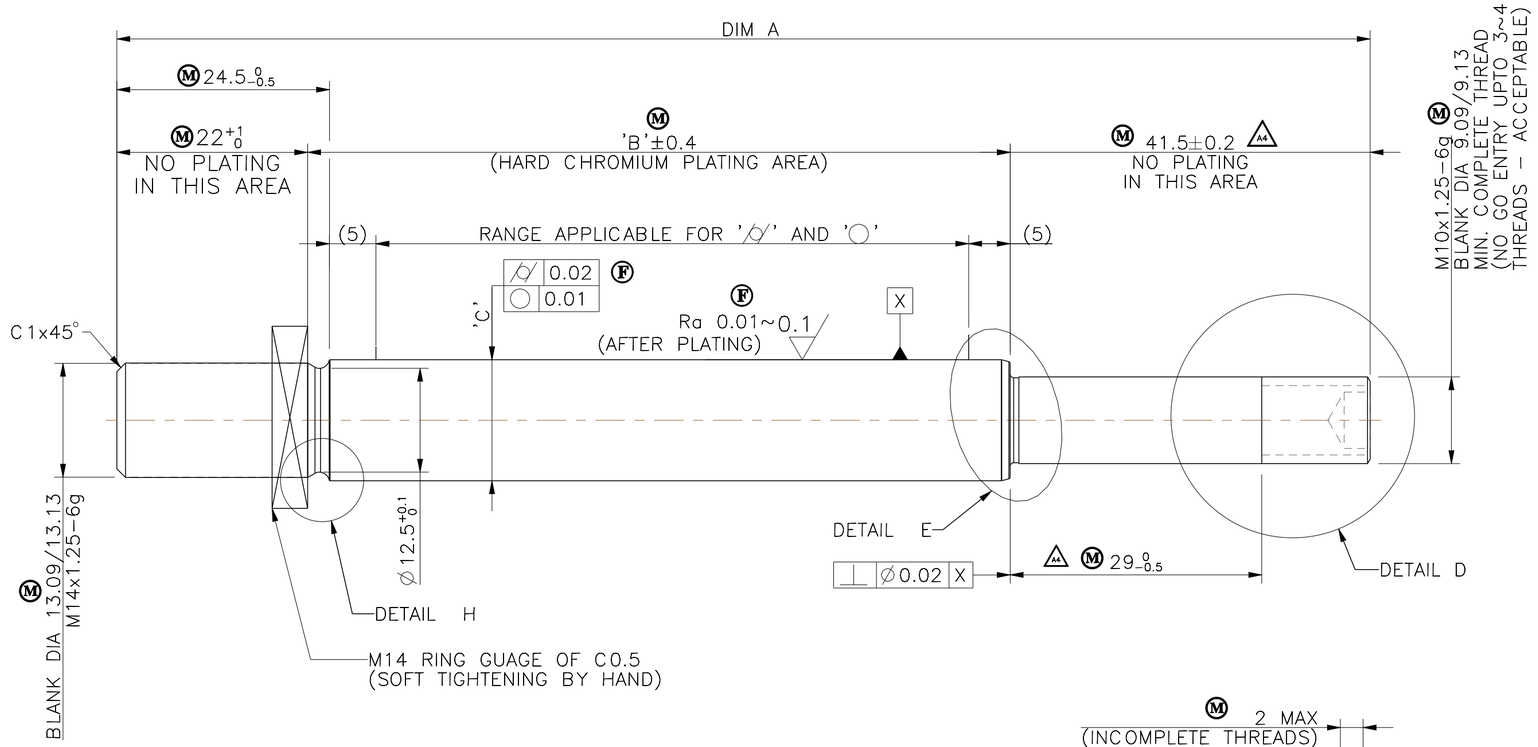

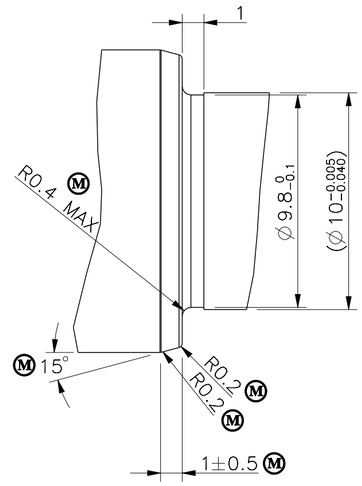

DETAIL E
SCALE 10:1

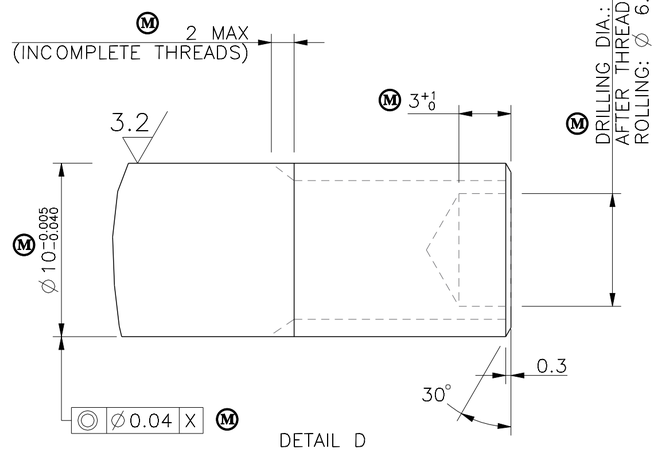

DETAIL D

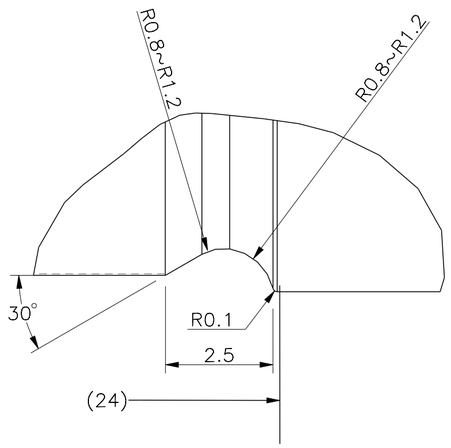

DETAIL H
SCALE 10:1

NOTE:

1. TO BE GROUND TO FINISH SIZE AFTER PLATING. MATERIAL REMOVAL 3~5μ ON DIAMETER.
2. MUST BE FREE FROM PIN HOLE, ROUGH SURFACE & BLISTER AFTER PLATING.
3. (M) MUST BE NO CHATTER, SCRATCH, ABRASION AND BRUSIE ON SURFACE
4. (M) CHROME HARDNESS : HV 800 MIN. / 50gms LOAD
5. PARTING PIP NOT PERMITTED

(F) 6a. CORROSION RESISTANCE : UP TO 24 Hrs CASS TEST, RATING NO.9 MIIN

6b. PLATING VALIDATION : CORROSION TEST AS MENTIONED, OTHER PARAMETERS AS PER GSP 0103.

03.07.2020	A4	DIM 144.5 WAS 143, 29 WAS 27.5,41.5 WAS 40	839−05
23.10.19	A3	DIM 143 WAS 145.1, 81 WAS 83.1	839−03
17.10.19	A2	RELEASED FOR OTS, NOTES 6a 24Hrs CASS TEST WAS 96Hrs NAS TEST.	839−03
05.06.19	A1	RELEASED FOR PROTOTYPE	
DATE	REV	ALTERATION	E.C.N.No

SUPERSEDES :

GENERAL TOLERANCE ASPER :PE /GT/001

DESIGN SOURCE REF.

RELEASE FOR
☐ COSTING ☐ PROTOTYPE ■ OTS ☐ PRE−PRODUCTION ☐ PRODUCTION

GABRIEL INDIA LTD.

SCALE 1:1	SHEETS 1 / 1
FINISH: REFER TABLE	MASS: 144.3 g
DRAWN BY SANTHOSH KUMAR	NAME:− PISTON ROD
DATE: 03.07.2020	
CHECKED BY VRISHALI	
DATE: 03.07.2020	MATERIAL:−
APPROVED BY DIWAKAR BHAT	SAE 1035 (R.M = ∅14.25±0.04) (F) AS PER GP 136−3
DATE: 03.07.2020	PART NO:− 184040175
	REV. A4

ALL DIMENSIONS ARE IN MM. | NO MANUAL ALTERATION | DO NOT SCALE | IF IN DOUBT PLEASE ASK | SIZE : A2

FILE ARCHIVE LOCATION:

CONFIDENTIAL: THIS DRAWING AND THE INFORMATION THEREIN ARE THE PROPERTY OF GABRIEL INDIA LTD., AND SHALL NOT BE REPRODUCED, COPIED RECORDED IN ANY MEDIA, USED FOR ANY OTHER PURPOSE OR DELIVERED AND/OR DISCLOSED TO ANY THIRD PARTY WITHOUT WRITTEN CONSENT OF GABRIEL.